FLUSHING VALVE

Flushing valve for SUNFAB hydraulic motor SCM

SUNFAB's flushing valve ensures that the oil temperature inside the motor housing remains at the recommended level.
Excessively high temperatures reduce the service-life of the shaft seal and the viscosity of the oil deteriorates.

Function:
A small proportion of the motor's return oil flow is flushed through the motor housing and reduces the housing temperature.

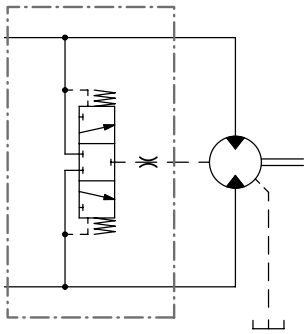

For motor SCM		025-034*	040–064*	084–130**
Flushing flow	l/min	6–8	8–10	10–12
Flushing pressure	Bar	20-30	20-30	20-30
Max. continuous pressure	Bar	350	350	350
Max. intermittent pressure	Bar	400	400	400
M6 orifice	mm	1.7	1.9	2.1
Weight	kg	3.4	5.4	6.2

*Only suits SUNFAB motors with S2/V2 back covers whose bolt pattern matches that of the valve.
**Only suits SUNFAB motors with V2 back covers whose bolt pattern matches that of the valve.
Subject to design alteration

Sunfab Hydraulics AB, Box 1094, SE-824 12 Hudiksvall, Sweden. Tel: +46 650-367 00, E-mail: sunfab@sunfab.se Web: www.sunfab.com

Dimensions flushing valve

Valve for SCM 025-034

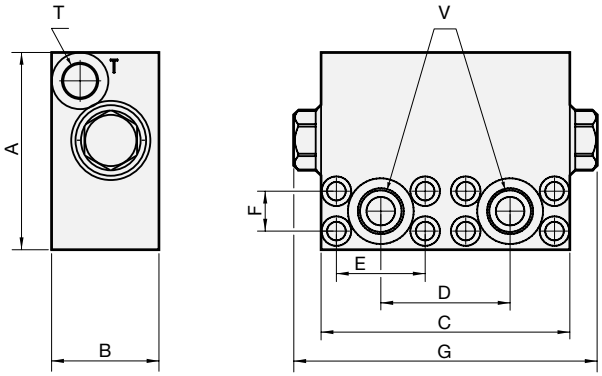

Valve for SCM 040–130

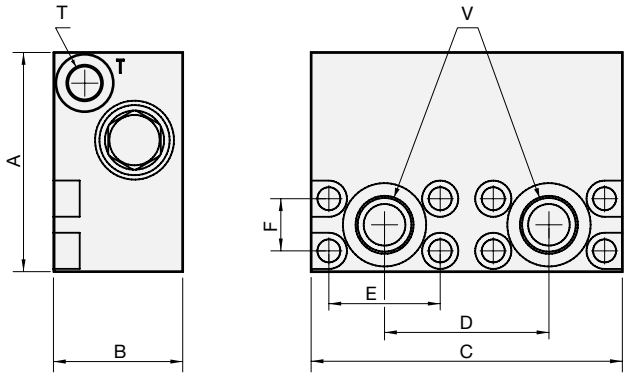

Dimension

Type SCM	A	B	C	D	E	F	G	T	V
025-034	90	49	113.5	59	40.5	18.2	138.4		G 1/2”
040-064	100	59	142	75	50.8	23.8	–	G 3/8”	G 3/4”
084-130	108	59	160	84	57.2	27.8	–		G 1”

Mounting options

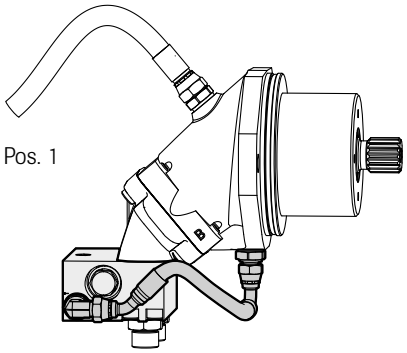

Pos. 1

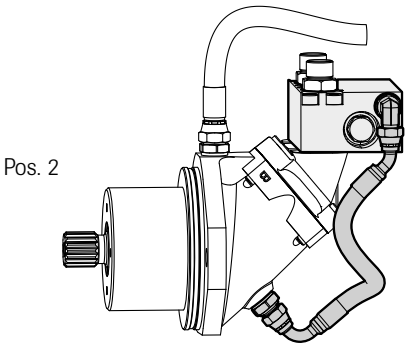

Pos. 2

Type SCM	025-034			040-064			084-130			
Valve part no.	91019-170			91020-190			91021-210			
Metric - Bolt kit part no.	50851			50852			50853			
UNC - Bolt kit part no.	51028			50907			51029			
Hose kit	M2	ISO	SAE	M2	ISO	SAE	M2	ISO	SAE-C	SAE-D
Pos 1 part no.	50847	50848	50949	50848	50848	50949	50848	50848	50949	50949
Pos 2 part no.	50847	50848	50948	50849	50849	50950	50849	50850	50950	50952

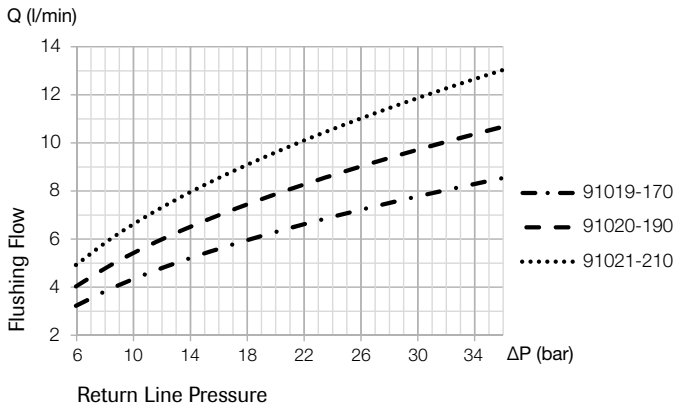

The drainage pipe should be connected to uppermost drainage outlet.
Initial opening pressure 5,7 bar. Valve fully switched at 9,3 bar.
For requests of other flushing flows, please contact Sunfab Hydraulics.

Sunfab reserves the right to make changes in design and dimensions without notice. Printing and typesetting errors reserved.
© Copyright 2026 Sunfab Hydraulics AB. All Rights Reserved.

Sunfab Hydraulics AB, Box 1094, SE-824 12 Hudiksvall, Sweden. Tel: +46 650-367 00, E-mail: sunfab@sunfab.se Web: www.sunfab.com